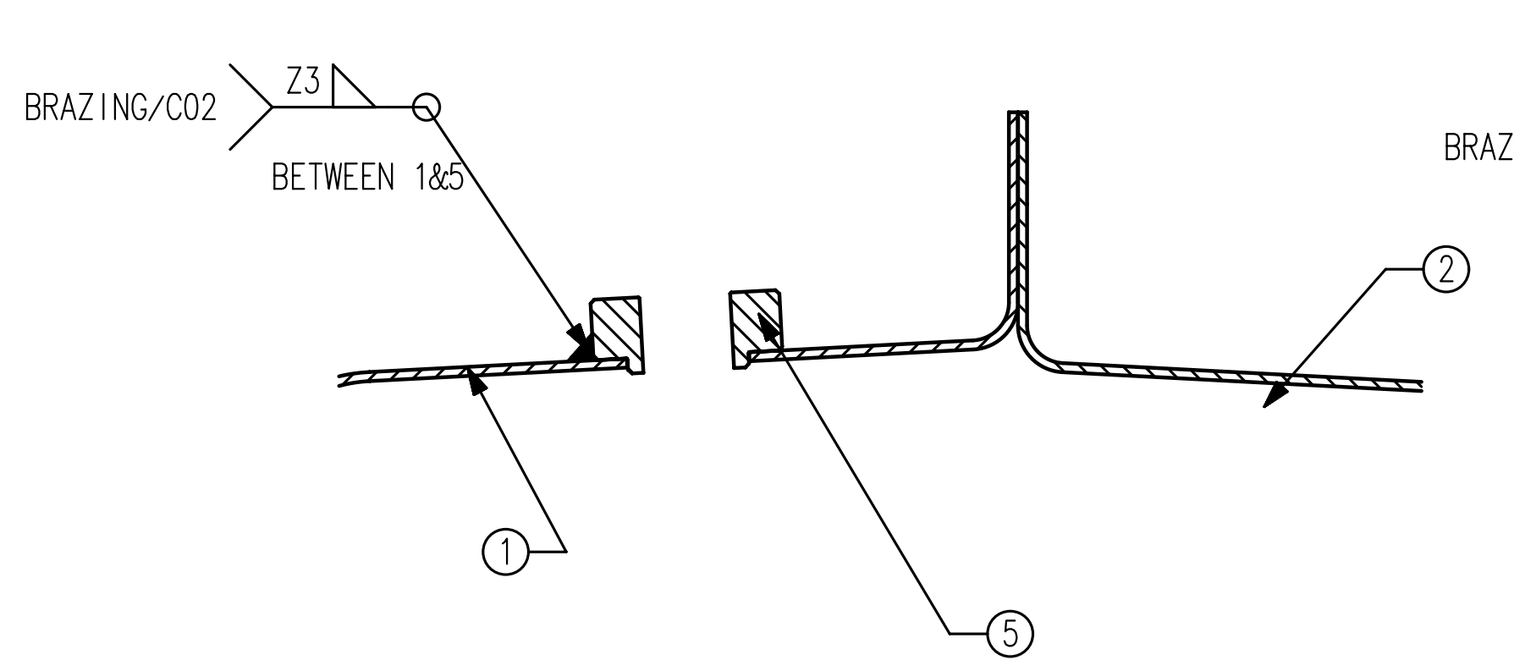
BRAZING/CO2
Z3
BETWEEN 1&5
①
②
⑤

SECTION C-C H9
SCALE 1:1

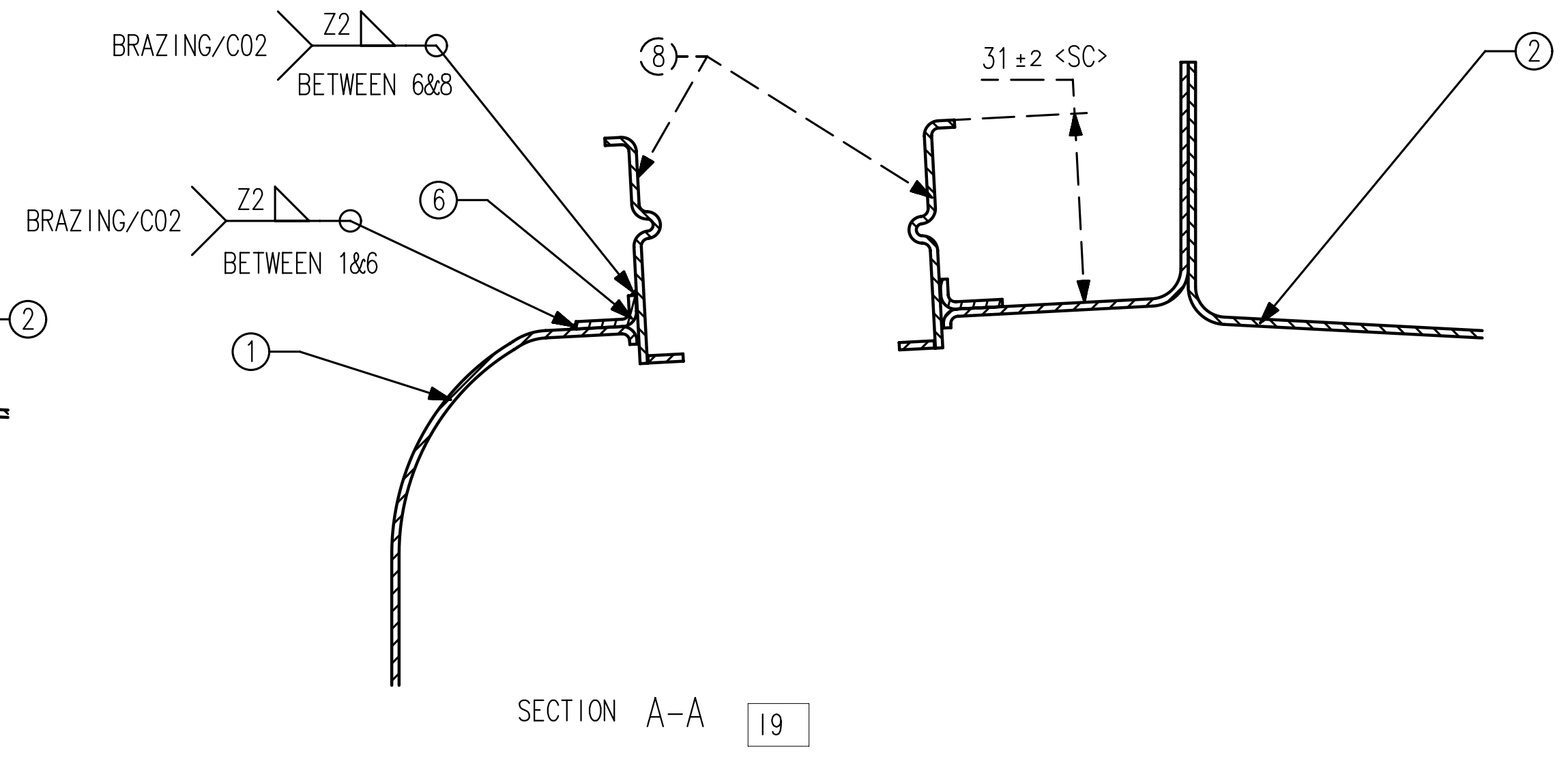
BRAZING/CO2
Z2
BETWEEN 6&8
BRAZING/CO2
Z2
BETWEEN 1&6
⑧
⑥
①
②
31±2 <SC>

SECTION A-A I9
SCALE 1:1

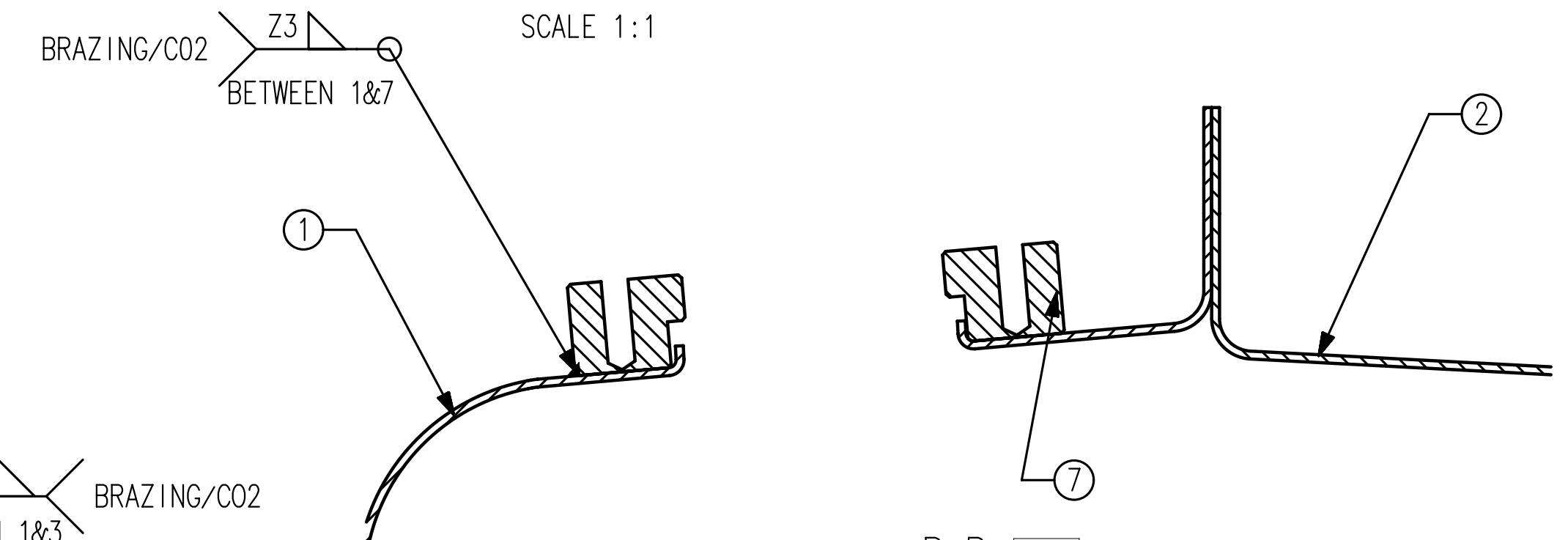
BRAZING/CO2
Z3
BETWEEN 1&7
①
②
⑦

SECTION B-B J9
SCALE 1:1

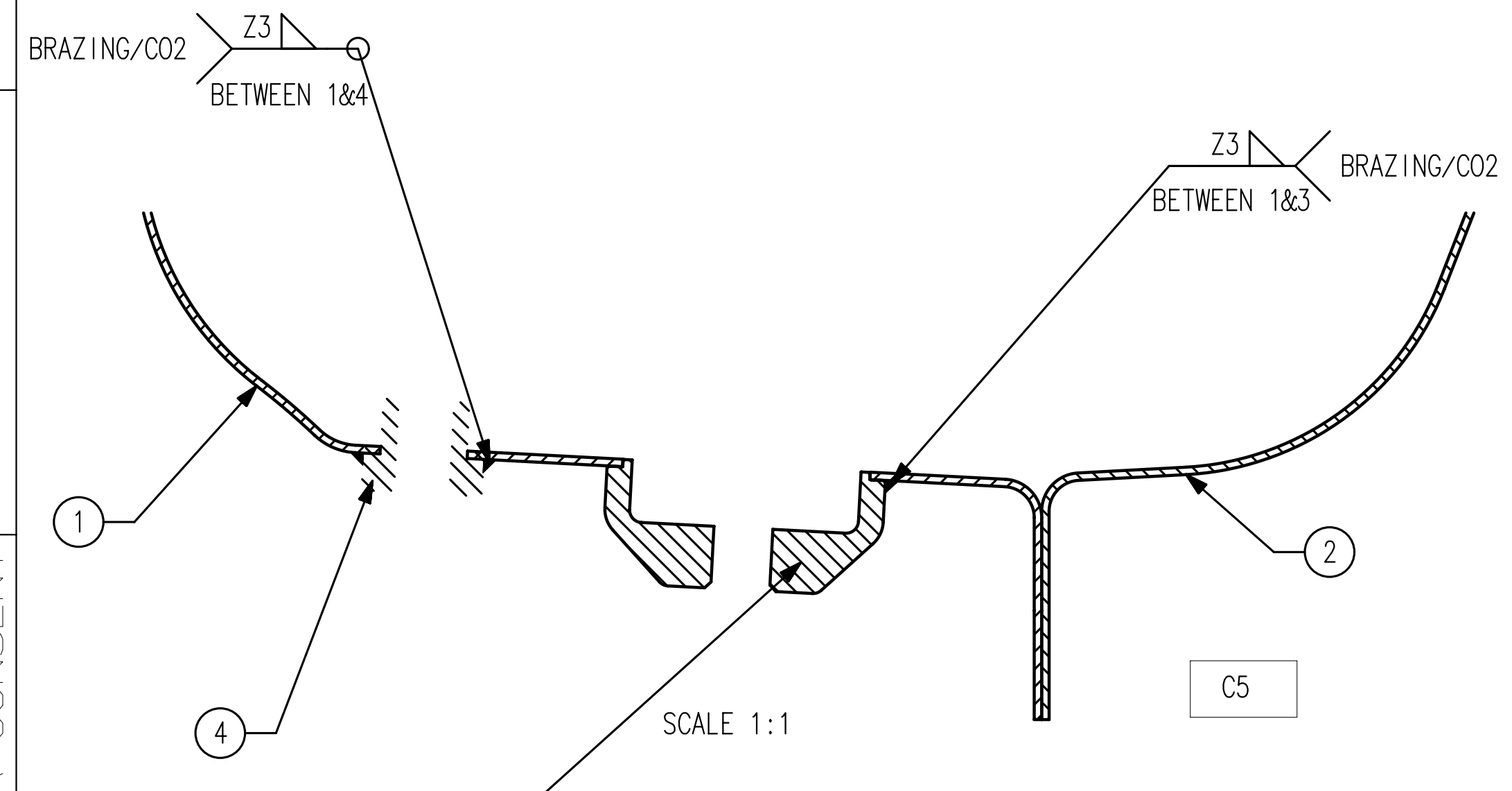
BRAZING/CO2
Z3
BETWEEN 1&4
Z3
BETWEEN 1&3
BRAZING/CO2
①
②
③
④
C5

SCALE 1:1
SECTION D-D

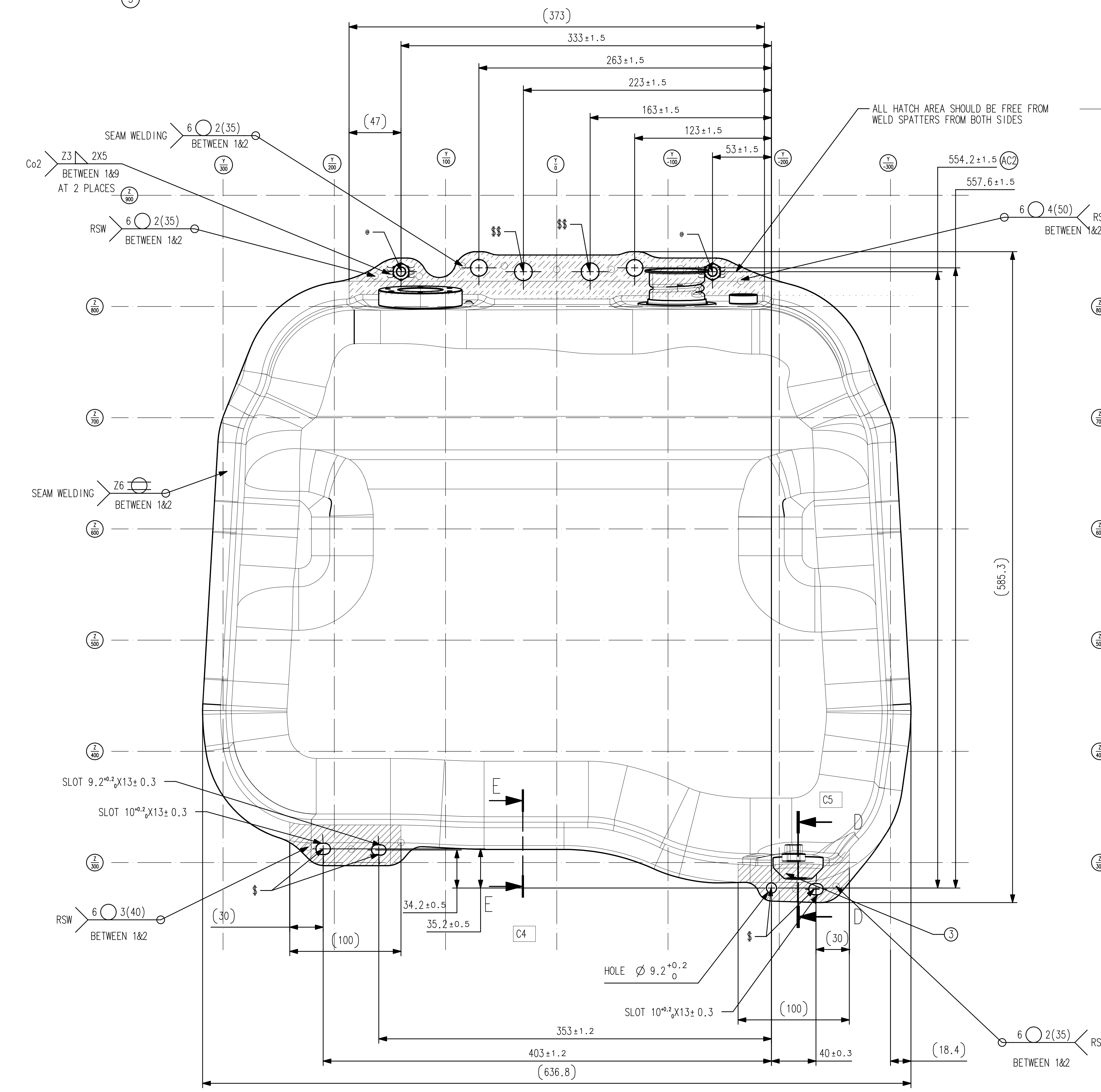
(373)
333±1.5
263±1.5
223±1.5
163±1.5
123±1.5
53±1.5
(47)
ALL HATCH AREA SHOULD BE FREE FROM WELD SPATTERS FROM BOTH SIDES
554.2±1.5 AC2
557.6±1.5
(585.3)
SEAM WELDING 6 2(35) BETWEEN 1&2
Co2 Z3 2X5 BETWEEN 1&9 AT 2 PLACES
RSW 6 2(35) BETWEEN 1&2
6 4(50) RSW BETWEEN 1&2
@
$$
$$
@
SEAM WELDING Z6 BETWEEN 1&2
SLOT 9.2+0.2 0 X13±0.3
SLOT 10+0.2 0 X13±0.3
$
RSW 6 3(40) BETWEEN 1&2
(30)
(100)
34.2±0.5
35.2±0.5
E
E
C4
C5
D
D
$
HOLE Ø 9.2+0.2 0
SLOT 10+0.2 0 X13±0.3
(30)
(100)
③
353±1.2
403±1.2
40±0.3
(636.8)
(18.4)
6 2(35) RSW BETWEEN 1&2
Y/300
Y/200
Y/100
Y/0
Y/-100
Y/-200
Y/-300
Z/900
Z/800
Z/700
Z/600
Z/500
Z/400
Z/300

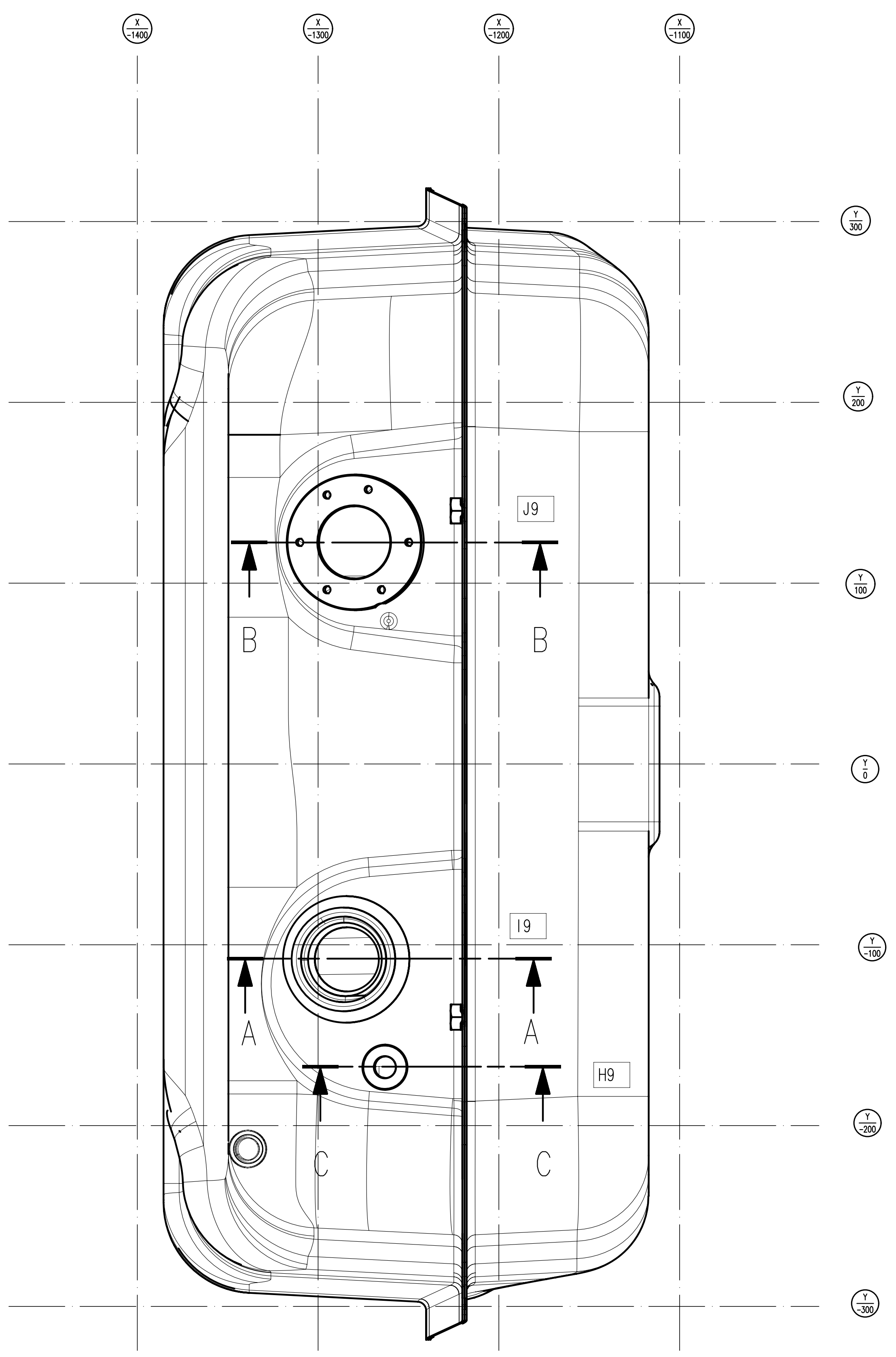
J9
B
B
I9
A
A
H9
C
C
X/-1400
X/-1300
X/-1200
X/-1100
Y/300
Y/200
Y/100
Y/0
Y/-100
Y/-200
Y/-300

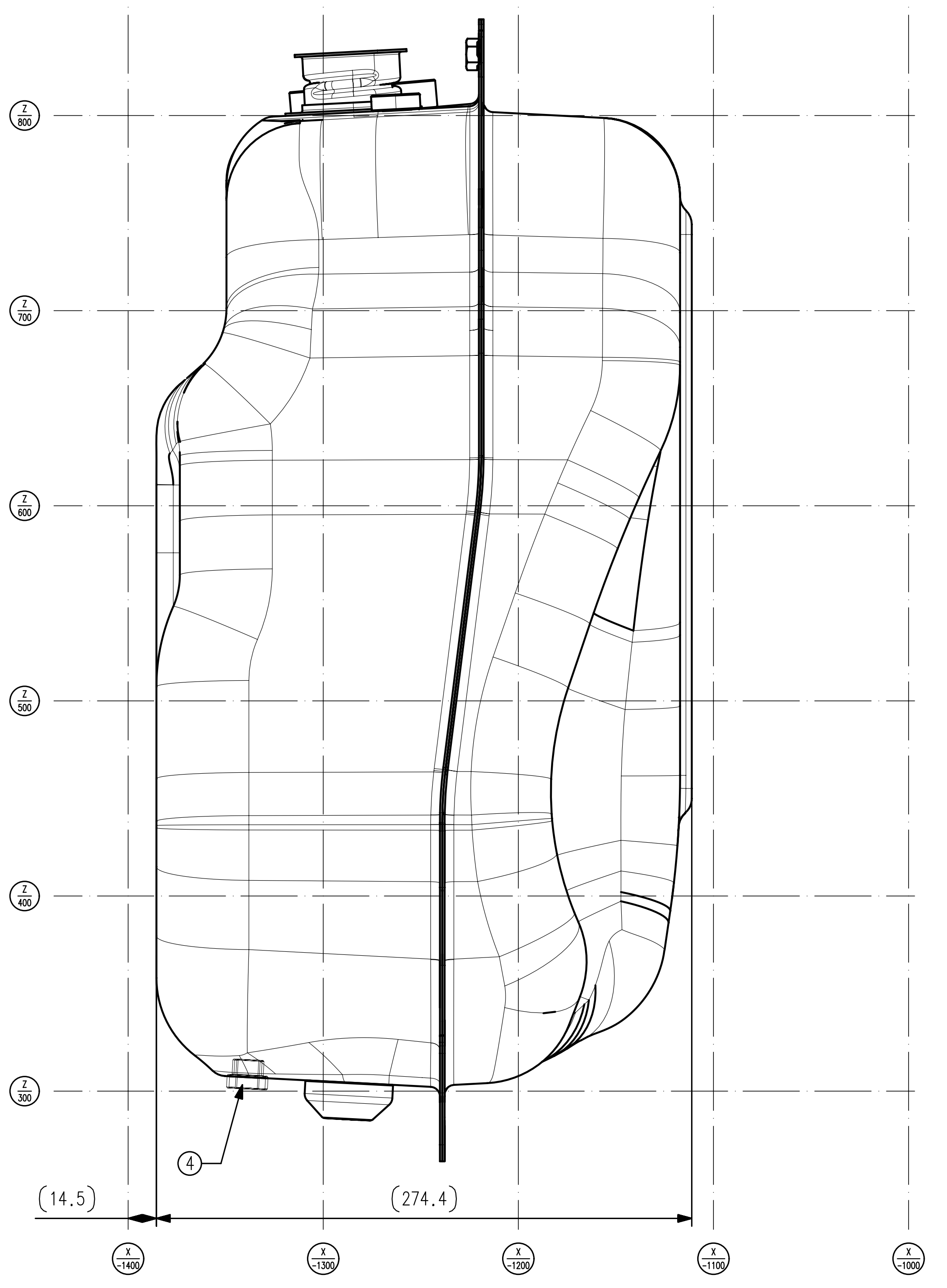
Z/900
Z/800
Z/700
Z/600
Z/500
Z/400
Z/300
④
(14.5)
(274.4)
X/-1400
X/-1300
X/-1200
X/-1100

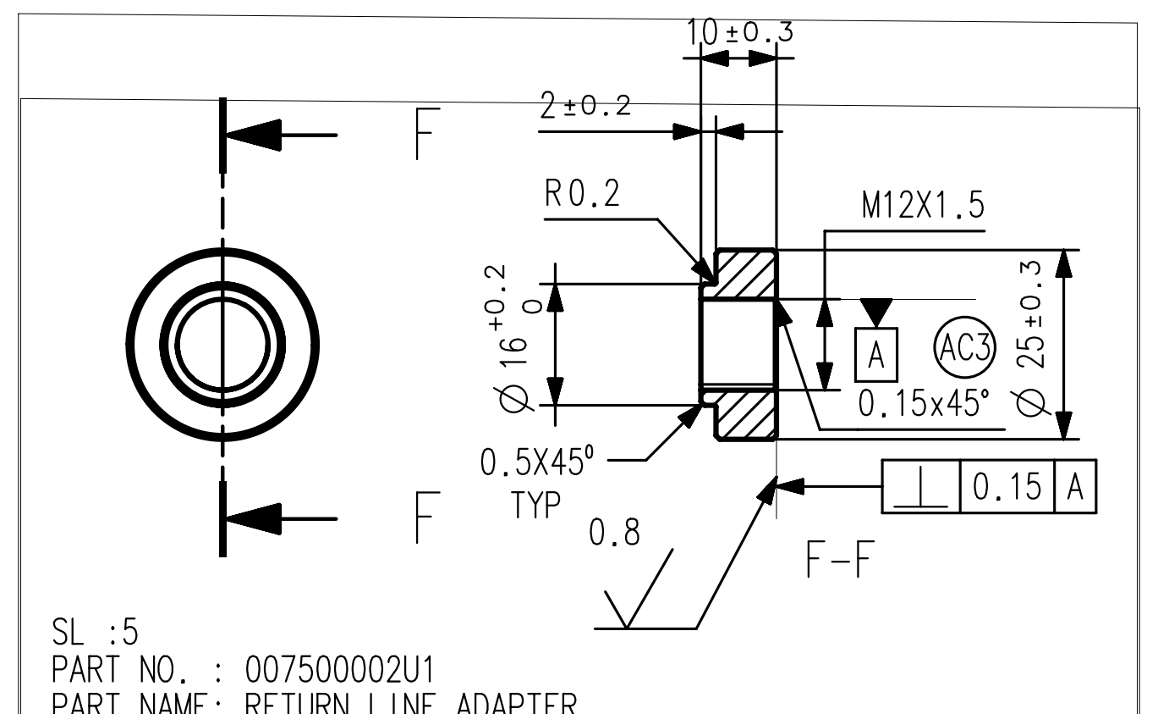
F
F
10±0.3
2±0.2
R0.2
M12X1.5
Ø 16+0.2 0
A
AC3
Ø 25±0.3
0.15x45°
0.5X45° TYP
0.8
⊥ 0.15 A
F-F

SL :5
PART NO. : 007500002U1
PART NAME: RETURN LINE ADAPTER

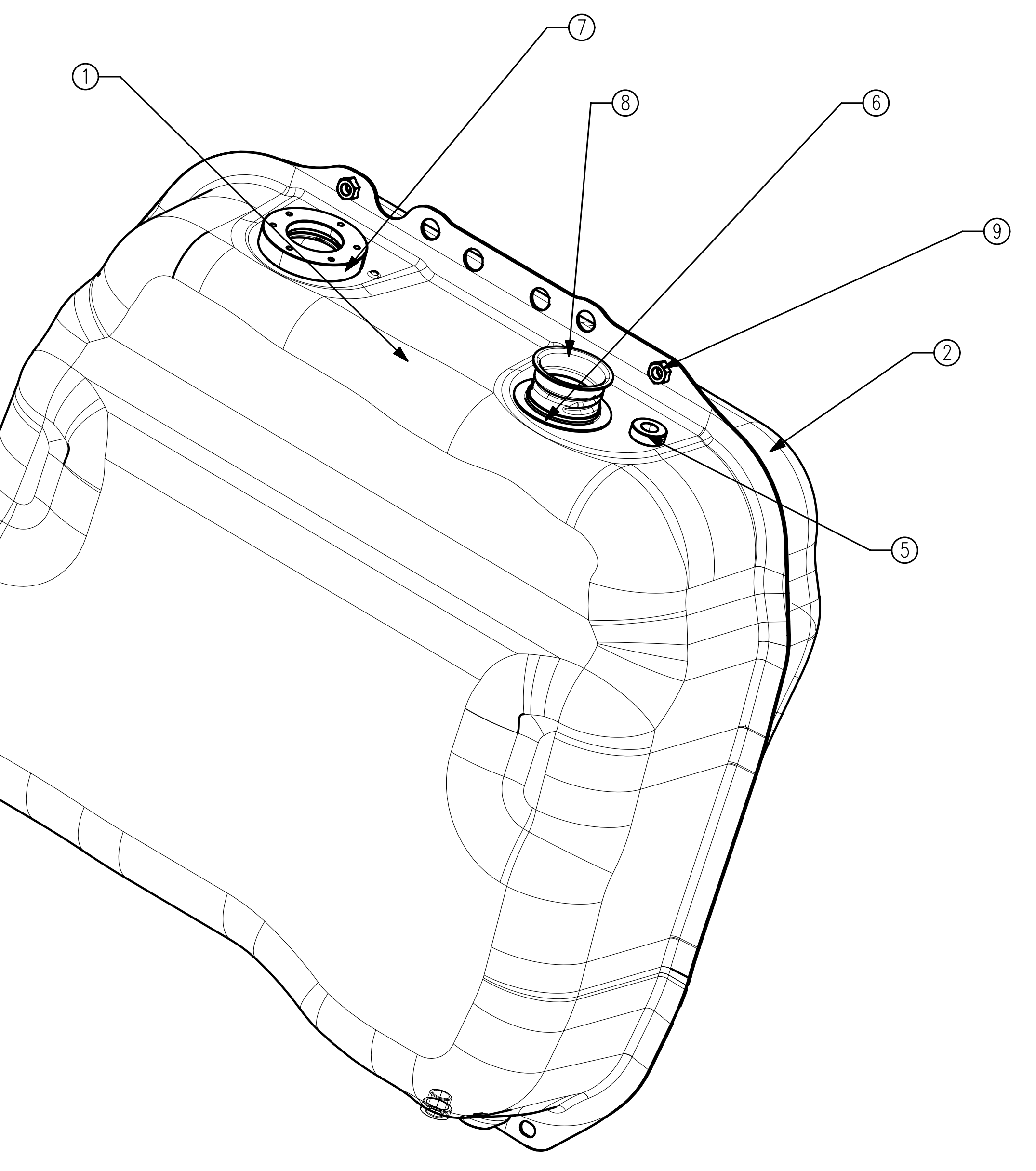

ISO VIEW

WELDING BETWEEN	CO2		SEAM WELD	NO OF SPOT WELD	BRAZING/CO2	
	Z3	Z1	Z6		Z3	Z2
1&2			2022	13		
1&3					138	
1&4					66	
1&5					78	
1&6						220
6&8						165
1&7					236	
1&9	20					
TOTAL	20		2022	13	518	385

TOTAL CO2 WELD LENGTH = 20mm
CO2 WELDING AS PER M&M STD FE G000600
TOTAL SEAM WELDING LENGTH = 2022mm
TOTAL BRAZING/CO2 LENGTH = 901mm
TOTAL NO OF SPOT = 13
SPOT WELDING AS PER M&M STD FEG 000599
WELDING LENGTH TOLERANCE AS PER PS 0000005623PS

NOTE:-
1.FUEL TANK SHOULD WITHSTAND THE INTERNAL PRESSURE OF 1.3atm (130kpa)
2.EACH FUEL TANK MUST BE TESTED FOR LEAKAGE UNDER PRESSURE OF 0.3atm
3.ALL OPENINGS OF FUEL TANK TO BE CLOSED BY SUITABLE PLASTIC CAPS OF PP WITH 20% GLASS FILLED OR RUBBER SUITABLE FOR TEMP. OF MIN.180°C
4.FUEL TANK CAPACITY APPROX. 60L
5.PIN Ø8 SHALL PASS THROUGH ALL '$' MARKED HOLES &
PIN Ø15.5 SHALL PASS THROUGH '$$' MARKED HOLES
BOLT M8 SHALL PASS THROUGH '@' MARKED HOLES
6.MASK THE FUEL GAUGE PLATE SUITABLY
7.APPROX FUEL TANK INSIDE AREA : 912615.42 mm²
(AB) △H 8. PART MUST COMPLY REGULATORY REQUIREMENTS AS PER AIS 104 AMENDED FROM TIME TO TIME.
(AB) △H 9. SUPPLIER OF THE PART SHALL TIMELY GET & SUBMIT TYPE APPROVAL & COP (CONFIRMATION OF PRODUCTION) CERTIFICATE TO M&M AS PER AIS 037 AS AMENDED FROM TIME TO TIME.

PRE-TREATMENT :
TANK ZINC PHOSPHATE COATING

(INDIVIDUAL HALVES WITH 007515843C2 & 007515844C2 WELDED)

(AB) NOTE APPLICABLE FOR PART NO. H07652201U91 ONLY:

SURFACE TREATMENT-INTERNAL:-
1.DEEP SEAL BLUE FROM M&M APPROVED SOURCE
2.APPLICAION VISCOSITY - 14±2 SEC BY BRUSH
- 25±2 SEC BY SPRAY
3.THINNER- DEEP SEAL THINNER SOVENT-84 AND SEAM WELDING FLANGES
4.APPLICATION TO INSIDE HALVES AND SEAM WELDING FLANGES BY
5.BRUSH OR SPRAY ON CLEAN, DRY SURFACE FREE OF RUST, DUST, OIL AND WATER.
6.SCRATCH HARDNESS-1000 GRAMS AFTER 24 HOURS
7.SEAM WELDING TO BE DONE AFTER TWO HOURS OF APPLICATION.
(AC4) 8.NO HOMOLOGATION REQUIRED FOR THIS PART.

(AC1) (AC5)

PROCUREMENT CONDITION	
PART NO	SUPPLY CONDITION
0P7652201U91	GREY PRIMED AS PER M&M STD FEG 000605 (REV :1) PROCEDURE 2

SURFACE TREATMENT EXTERNAL:
1. CLEANING MANUALLY AFTER DOING INTERNAL COATING & TANK ASSY (WITH ALL OPENINGS PLUGGED) DIESEL FLUSHING
2.MASK THE FUEL GAUGE SUITABLY
3.BAKING TEMP. 120°C - 150°C FOR 30 MIN/.

(AB) (AC5)

PROCUREMENT CONDITION	
PART NO	SUPPLY CONDITION
0P7650885U91	GREY PRIMED AS PER M&M STD FEG 000605 (REV :1) PROCEDURE 2

TOTAL OUTER SURFACE AREA : 1006463.3 mm2
TOTAL INNER SURFACE AREA : 912615.42 mm2

E-E C4

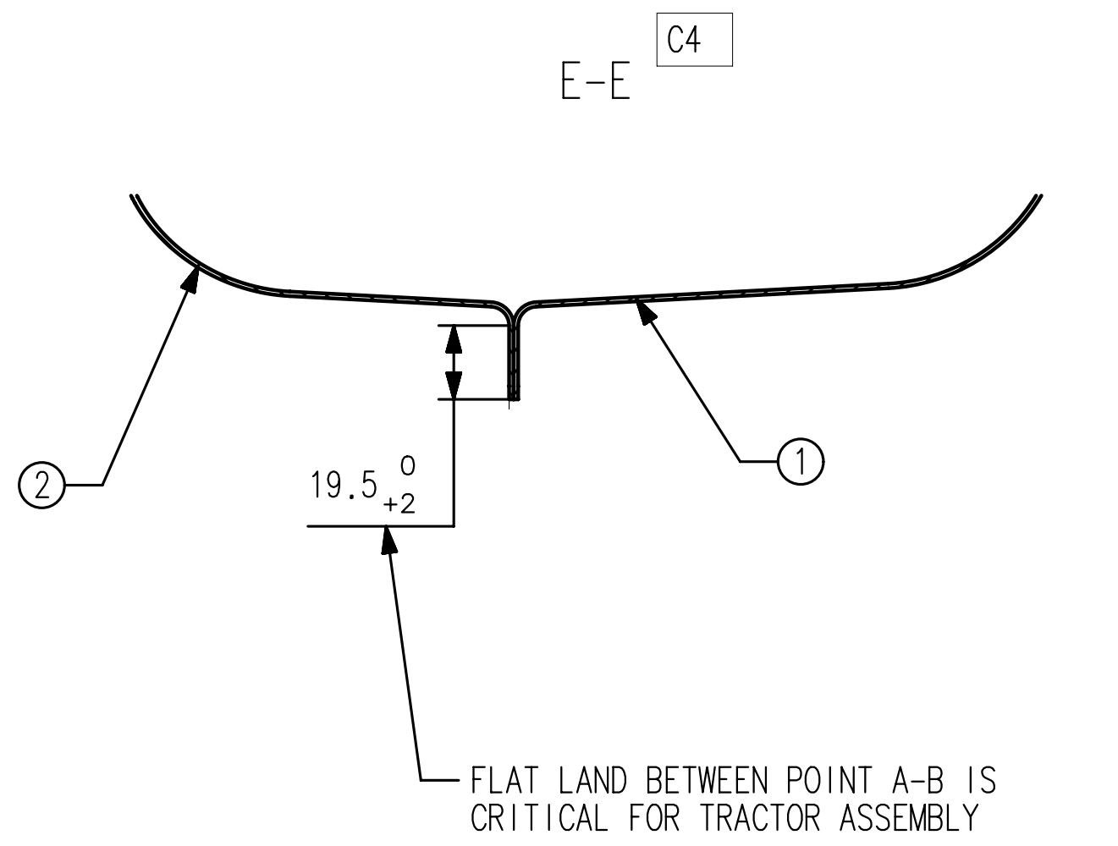

FLAT LAND BETWEEN POINT A-B IS CRITICAL FOR TRACTOR ASSEMBLY

(AA)

S.No.	PART NO	DESCRIPTION	QTY	MATERIAL	WGT/PART	WGT/ASSY
9	SF0308014	NUT HX WLD M8X1.25X6.5X8	2	--STD--	0.005	0.01
8	007515863C91	FUEL TANK NECK ASSY	1	1.2 THK MERW-N-380/240 AS PER G000157	0.074	0.074
7	008014140U1	FUEL TANK FLOATING UNIT SUPPORT BKT	1	MM11 0 14 mm THK M&M G000169	0.310	0.310
6	007515846C1	FUEL TANK NECK SUPPORT BKT	1	MM21 0 1.2 mm THK M&M G000169	0.022	0.022
5	007500002U1	RETURN LINE ADDAPTER	1	EN3 AS PER BS 970 HARDNESS 140-170 BHN	0.027	0.027
4	007515862C1	FUEL OUTLET ADAPTER	1	EN3 AS PER BS 970 HARDNESS 140-170 BHN	0.018	0.018
3	007515861C1	DRAIN PLUG ADAPTER	1	EN3 AS PER BS 970 HARDNESS 140-170 BHN	0.1	0.1
2	007515844C2	FUEL TANK REAR HALF	1	MFD22 EDD 1.2 mm THK AS PER M&M STD FEG 000688	4.357	4.357
1	007515843C2	FUEL TANK FRONT HALF	1	MFD22 EDD 1.2 mm THK AS PER M&M STD FEG 000688	5.045	5.045

ER/ECN NO	C/L	LOC	REVISIONS	DSR	CKR	APR	DATE
		C14	5. PROCUREMENT CONDITION UPDATED				
		D14	4. NO HOMOLOGATION NOTE ADDED				
		K12	3. DIMN ADDED				
		G7	2. TOLERANCE UPDATED				
ER22I0000024	AC	D14	1. PROCUREMENT CONDITION ADDED	AR	AR	NVC	16/07/20
ER19C0005849	AB	C13 D14	PRIMED PART NO. CORRECTED FROM 0PH07650885U91 TO 0P7650885U91 HOLOGATION NOTE ADDED, NOTE APPLICABLE TO PART NO. H07652201U91 ADDED	RS	TP	RNM	30/01/2020
ECN19P004637	AA	B13	SL.NO 7 008014140U1 WAS 007515845C1	SAI	TP	RNM	24/09/19

STAMPING TOLERANCES FOR ASSEMBLY

SURFACE	⌓ 3.0 A B C
TRIM EDGE	⌒ 3.0 A B C
HOLE POSITION	⊕ 1.0 A B C

SURFACE FINISH SYMBOLS:ISO-1302:1992
WELDING SYMBOLS:IS 813:1986

MAHINDRA & MAHINDRA LTD.
FARM DIVISION, INDIA

DRG STG :	ER/ECN NO:ERI9C0005849			PART NO: H07650885U9I
C/L :	TRCT MODEL: mSTAR P2			DESCRIPTION: TANK FUEL ASSEMBLY
UNIT QTY : I		NAME	DATE	
S/F AREA : cm²	DSNR	RS	I9-09-I9	MATERIAL: Refer Bom
WEIGHT : 9.963kg	CHKR	TP	I9-09-I9	
SC COUNT : 0	APPR	RNM	I9-09-I9	HEAT TREATMENT:
CC COUNT ▽ : 0	MTL.APPR		I9-09-I9	
SF COUNT √ : 0	DRG SIZE	SCALE	SHEET	SURFACE TREATMENT:
⊕ ◁	A0	I:I	I of I	

THIS DRAWING IS A SOLE PROPERTY OF M & M ltd. IT SHOULD NOT BE REPRODUCED IN ANY FORM OR BY ANY MEANS WITHOUT THEIR CONSENT

BREAK SHARP CORNERS MAY BE EITHER CHAMFER OR RADIUS FROM 0.2 mm MIN. TO 1.0 mm MAX. | CHECK DRAWING WITH LATEST CHANGE No | DO NOT CHANGE MANUALLY | COMPUTER GENERATED DRAWING | ALL DIMENSIONS ARE IN mm